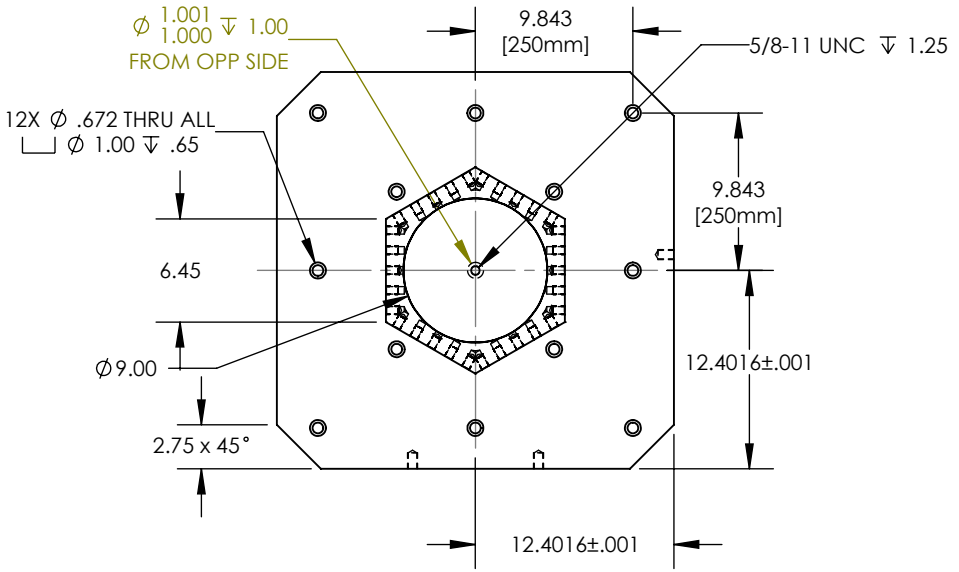

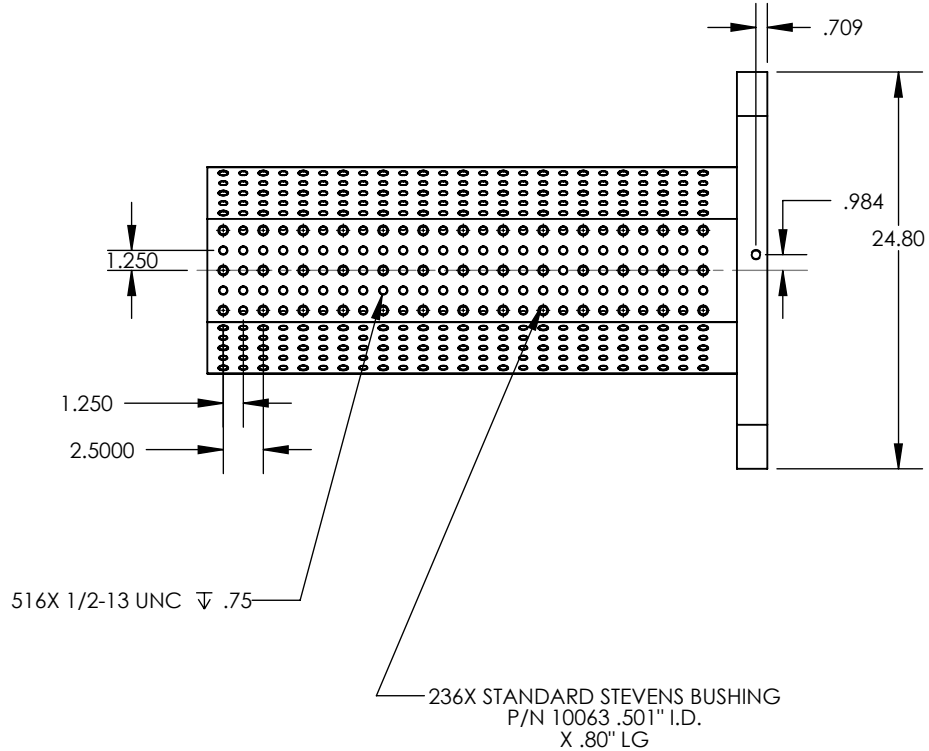

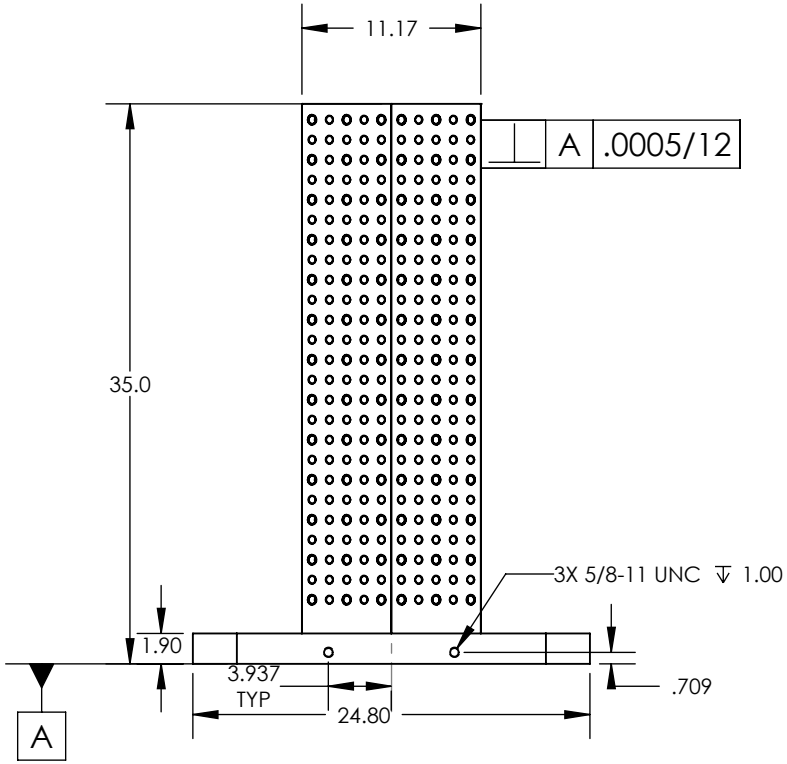

6-SIDED TOMBSTONE

STEVENS ENGINEERING, INC.
3946 W. Clarendon Avenue
Phoenix, AZ 85019
Phone: (800)635-0657
Fax: (602)272-0717
www.stevenseng.com

MATERIAL: HR STEEL	DIMENSIONS ARE IN INCHES UNLESS OTHERWISE SPECIFIED ANGULAR: ± .5° ONE PLACE DECIMAL ± .050 TWO PLACE DECIMAL ± .015 THREE PLACE DECIMAL ± .005	DO NOT SCALE DRAWING	SIZE A / DWG. NO. 248-6-065-350-ST / REV
FINISH: N/A		DRAWN BY M.C.	
HEAT TREAT: N/A		DATE DRAWN 7/9/13	SCALE: 1:12 / SHEET 1 OF 1

5 4 3 2 1